The supplier acknowledges that, with the acceptance of the drawing, he is in a position to manufacture the illustrated part in accordance with the drawing in reproducible from and series production. Through the selected manufacturing processes no properties will be created which could subsequently lead to an impairment of the component. Verbal agreements over and above that are not valid. Deviations from this rule must be writing and must be signed by the purchaser.

This drawing may not be copied, reproduced or made available to third parties in any way whatsoever without or prior written approval.

Technische Daten/ technical data	:	Akkupack/ batterypack
Chemie/ chemistry	:	Lithium Ion
Model name	:	18650 2S1P 2INR19/66
Zellenzahl/ no. of cells	:	2 Zellen/ cells
Zellentypl/ cell type	:	LG Chem INR18650 MJ1
Kapazität/ capacity	:	nom. 3500mAh discharge at 0.2C min. 3350mAh discharge at 0.2C ta:20°C; EV(Discharge End Voltage): 2.5V per cell
Innenwiderstand/ impedance	:	< 140mOhm (battery and safetyboard)
Nominalspannung/ nominal voltage	:	7.27V
Standard Ladespannung/ standard charge voltage	:	8.4V
Standard Entladespannung/ standard discharge voltage	:	5.0V
Nominaler Ladestrom/ nominal charge current	:	0.5C
Maximaler Ladestrom/ maximum charge current	:	1C
Ladeendstrom/ charge end current	:	0.01C recommended
Maximaler Entladestrom/ maximum discharge current	:	5000mA (limited by safetyboard)
Anwendungstemperaturbereich/ ambient temperature range	:	0°C...+45°C charge -20°C...+60°C discharge -20°C...+30°C storage max. 1 year -20°C...+45°C storage max. 3months
Selbstentladung/ self discharge	:	≤ 5% / month at 20°C ≤ 10% / month at 30°C ≤ 20% / month at 40°C
Standards/	:	UN 3480, Subsection 38.3 All cells and batterypacks type tested according to UN manual of test and criteria subsection 38.3 IEC62133-2:2017

Technische Daten/ technical data	:	Sicherheitsschaltung/ safety board (0180-3029)	
Überladeschutzspannung/ over charge voltage detection	:	4.3V±25mV	per cell
Wiedereinschaltspannung/ over charge release voltage	:	4.1V±50mV	per cell
Entladeabschaltspannung/ over discharge detection voltage	:	2.4V±50mV	per cell
Wiedereinschaltspannung/ over discharge release voltage	:	3.0V±100mV	per cell
Nominaler Lade/Entladestrom/: nominal operating current	:	5A	
Entlade Abschaltstrom/ discharge cut off current	:	13A± 3A	
Kurzschlussschutz/ short circuit protection	:	gegen äußeren Kurzschluss/ against external short circuit	
Temperarurschalter/ temperature switch	:	PTC : JK-P730 20V/7.3A at 25°C; 6.2A at 40°C	
MOSFET	:	in Masse in Gnd	
Rückstellkriterium/ release condition	:	Last trennen, Aktiv nach Anladen/ cut load, release after charging up	
Leiterplattenmaterial/ pcb material	:	FR4	
Nettogewicht/ net weight	:	ca./ approx. 101g	
Standards	:	CE, UKCA	

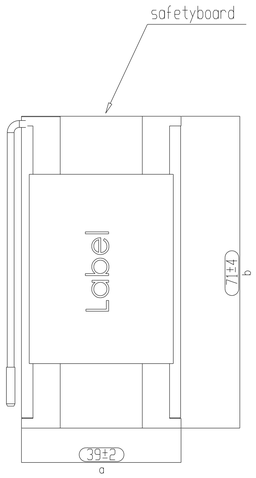

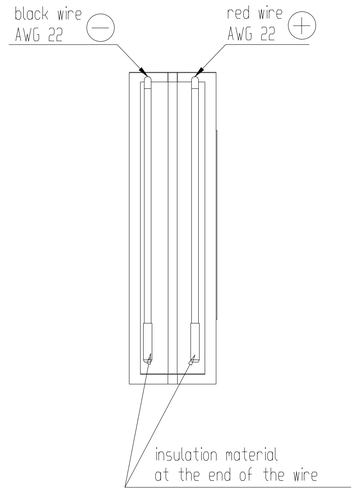

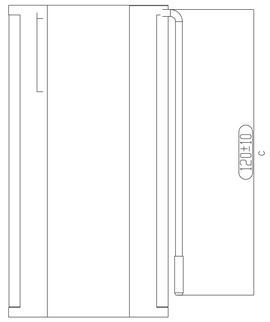

Batterypack covered with 2 layers of blue shrinktube

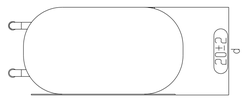

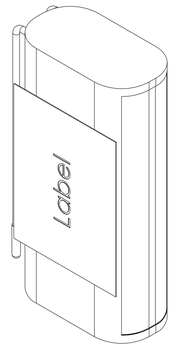

Part Number	SAP Description
2447-3030-20	Li-Ion-7.27V-3500mAh-2S1P-PTC/LG
2447-3030-220	Li-Ion-7.27V-3500mAh-2S1P-PTC/UK

Version	Change	Date	Name
V7	standards updated	07.06.2021	DS
V6	change request: GB-20-7004	04.03.2020	DS
V5	change request: DE-20-5013	13.02.2020	MSt
V4	add the BP model name	13.01.2020	JX
V3	part number overview added	15.04.2019	DS
V2	cable length changed	16.01.2018	DS
V1	change request: DE-17-0071	14.11.2017	DS
V0	created this D/S	12.10.2016	JX

Allowable deviation general tolerances: DIN ISO 2768-m

Surface:

	Date	Name
Drawn by	12.10.2016	JX
Changed by		

ANSMANN®

Material:

Weight

Scale (DIN A2): 1:1

Projection method: 1

Product name:

Li-Ion-7.27V-3500mAh-2S1P-PTC/LG

Part number: **2447-3030-X20**

Project: **IS-01263**

Application range for inquiry: **XXX/XX**

Sheet: 1/1